Do you know what happens to your water between the distribution center and your home?

Problem

- Water is treated centrally
- But travels through **aging pipelines before reaching homes**
- Quality can degrade during this last-mile delivery
- The utility is responsible for the water until it reaches your **property line**.
- You are 100% responsible for private wells
- Consumers lack **real-time visibility**

Water may be safe at the plant but, is it safe at the tap?

Scale of the Problem

- 257+ million Americans rely on public drinking water systems
- ~240,000 water main breaks occur annually
- Many pipes are **40–100+ years old**
- 6–10 million homes still connected via **lead service lines**
- 30–40 million Americans rely on **unmonitored private wells**

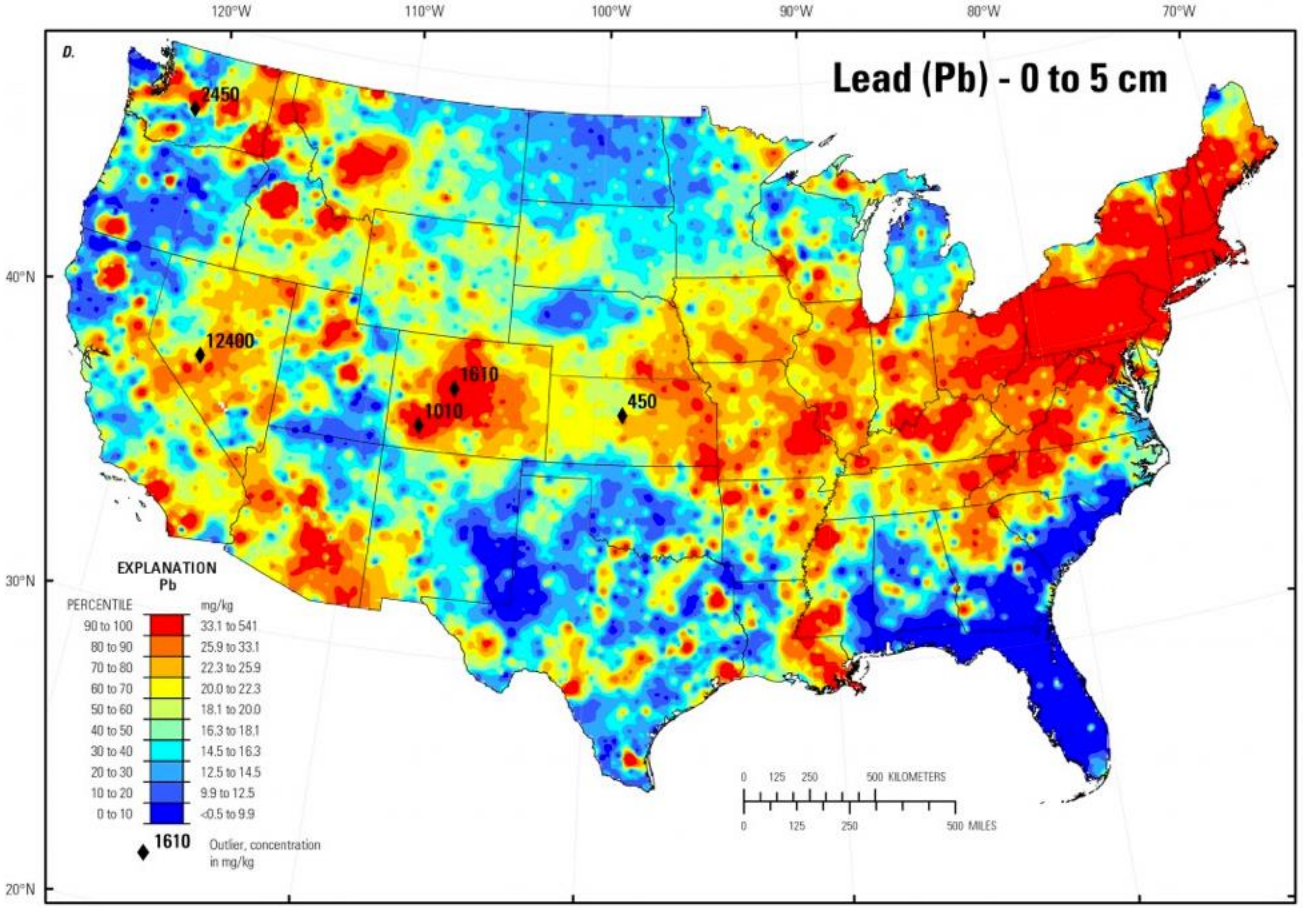

https://aanmc.org/naturopathic-news/flint-water-crisis-environmental-medicine-perspective/

When Distribution Systems Fail - Flint Water Crisis

What happened

- City switched water source to reduce costs
- Lack of corrosion control caused **lead leaching from aging pipes**

Scale

- ~100,000 residents exposed
- 9,000 children at risk of lead exposure
- Legionnaires' disease outbreak → **12 deaths**

Consequences

- Neurological damage risks in children
- Long-term loss of public trust
- **Hundreds of millions of dollars** in infrastructure repairs

The Hidden Danger in Troy's Water

- A family in Troy, NY wakes up. They brush their teeth, make coffee, give their toddler a sippy cup of water.

- They don't know the water contains lead levels 10 times higher than EPA safety limits.

Troy's Lead Crisis by the Numbers

171

ppb lead detected

(EPA limit: 15 ppb)

4,500

lead service lines needing replacement

Why Today's Monitoring is Not Enough

- Utilities test water at treatment plants
- Limited sampling points in distribution network (Samples 60 homes every 6 months)
- No continuous monitoring at household entry
- Problems often identified after citizens complaint

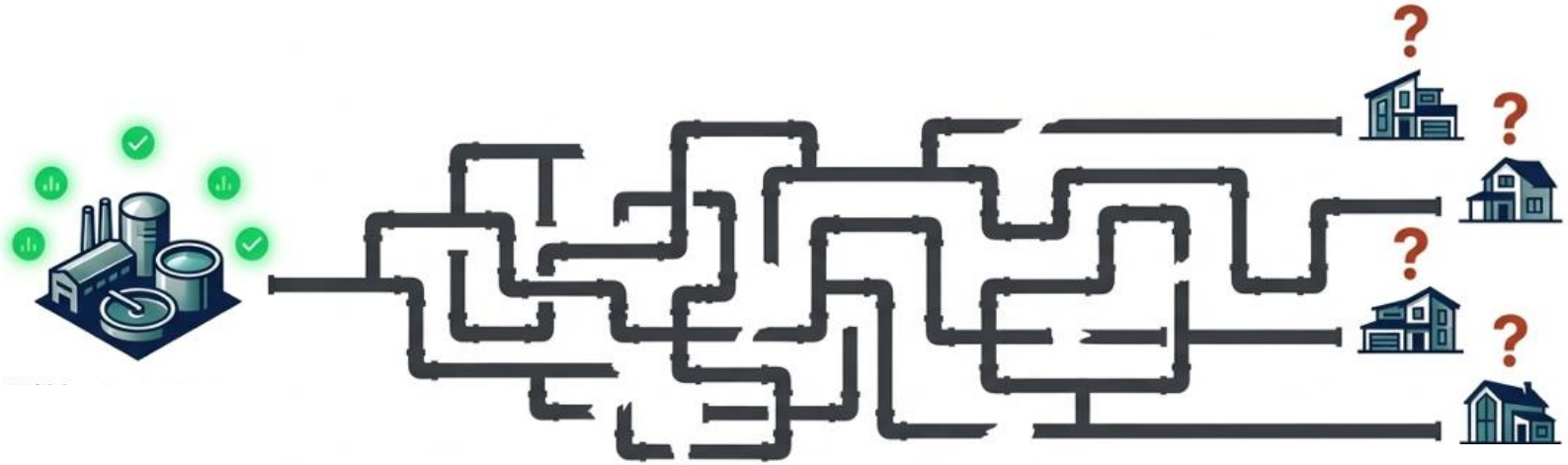

Delayed contamination detection and slow response.

Why Current Solutions Aren't Enough

There are a very limited number of functions provided by companies:

Water usage

Leaks

Plumbing health

There are no companies in the market that provide continous monitoring of water quality

City of Troy

- Replacing 4,500 lines will take years
- Utility Testing is slow

Private Market

- No water usage
- No leakage
- No plumbing health

Why Current Solutions Aren't Enough

Utility Testing

- Limited sampling (e.g., ~60 homes every 6 months)
- No real-time household monitoring
- Issues often detected **after complaints**

Smart Home Water Monitors (e.g., Moen Flo, Phyn)

- Focus on **leak detection & usage tracking**
- Do **not monitor drinking water contamination**
- Not connected to utility quality monitoring systems

Standalone Water Quality Tests

- Manual or lab-based measurements
- Provide **snapshot data — not continuous insights**

AquaSure: Real-Time Water Quality Intelligence Transforming household water meters into drinking water safety guardians

- Upgrade existing water meters with **integrated quality sensors**
- Continuous monitoring at **point of entry to homes**
- Real-time data transmission to utility cloud platform
- Early contamination detection and alerts
- Every household meter becomes a **water safety node.**

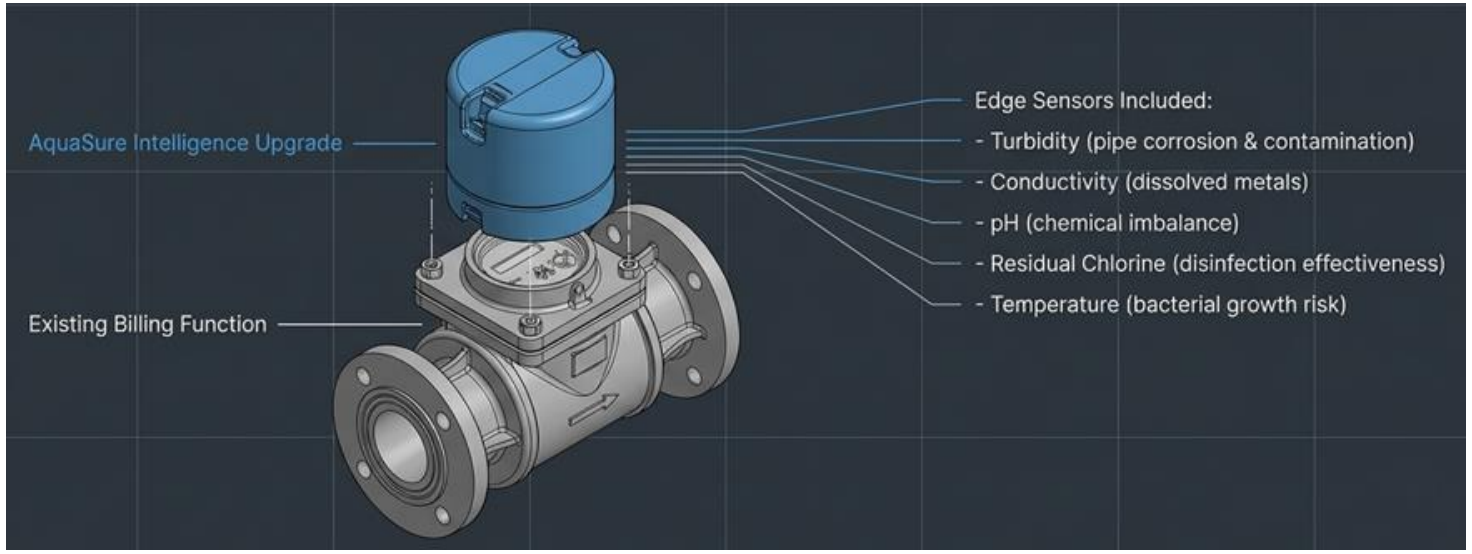

AquaSure: How it Works

AquaSure : Innovation

- Integrates **billing + quality sensing in one device**
- Creates distributed **last-mile water intelligence netwo**
- Enables **high-resolution contamination mapping**
- Real-time transparency for utilities and residents
- Supports predictive infrastructure maintenance

	Centralized Utility Testing	Smart Home Monitors (Moen, Phyn)	**AquaSure**
Real-Time Chemical Tracking	✓	✗	✓
Last-Mile Visibility	✗	✓	✓
City-Scale Spatial Intelligence	✗	✗	✓
Automated Leak & Flow Billing	✗	✓	✓

Before: Isolated Sampling

Blind Spots: >99% of network unmonitored.

After: Continuous Spatial Network

Spatial Intelligence: 100% network visibility with real-time alerts.

Why AquaSure Is The MVP Prototype

- Continuous monitoring vs. every 6 months
- Household precision vs. system-wide averages
- Affordable at scale: $50-80 per home vs. $300+ monitors
- Helps residents AND city prioritize replacements